SIGENERGY

Your Green Energy Partner

Australia

Safe

Intelligent

Green

Efficient

New

SIGEN

SIGENERGY

Founder & CEO

Tony Xu

Created Global **No.1** PV Inverter Brand & Shipment

Created China **No.1** AI Computing chips & Framework

HUAWEI

1999 - 2010

Head of Wireless Algorithm R&D

HUAWEI

2010 - 2020

President of Smart PV Business

HUAWEI

2020 - 2022

President of AI Business

SIGENERGY

2022

Founder & CEO

Shanghai HQ & Factory

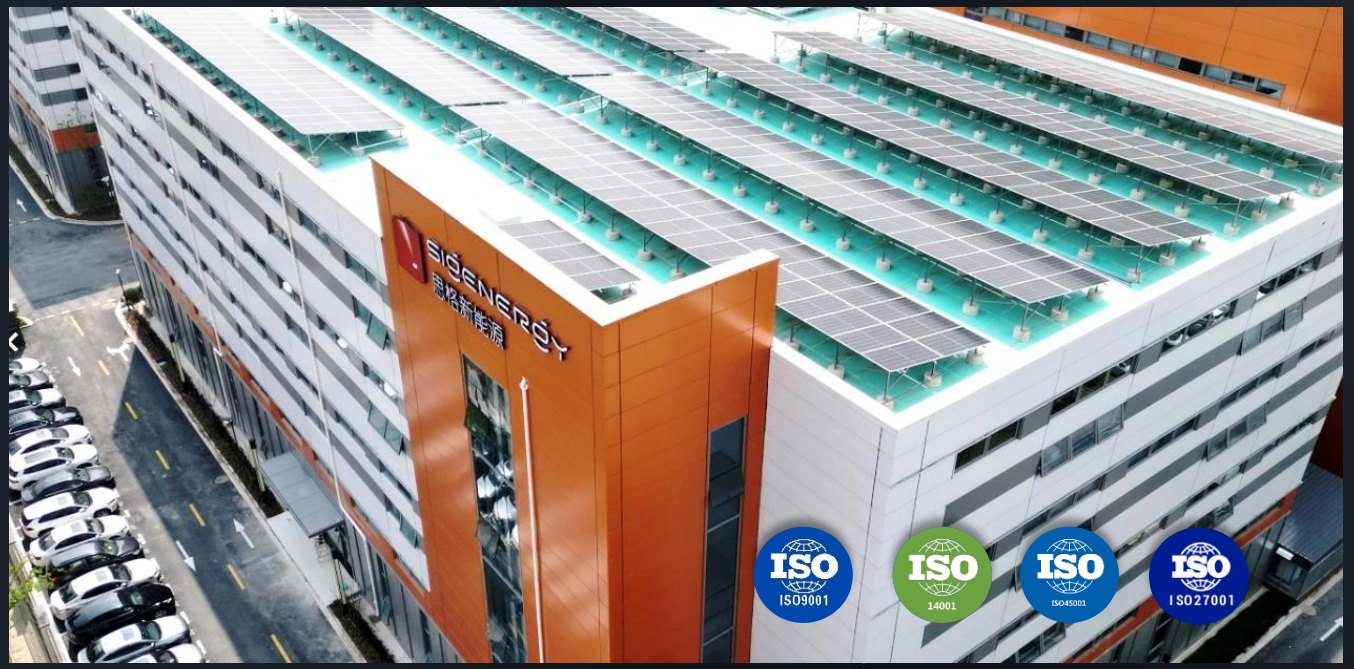

10,000 sqm

34+ Global Markets

20,000 sqm

2 GWh Battery Production

4 GW Power Production

Remove industry **pain points**

with an **innovative** solution

that's **Simpler, Safer & Smarter**

in every way.

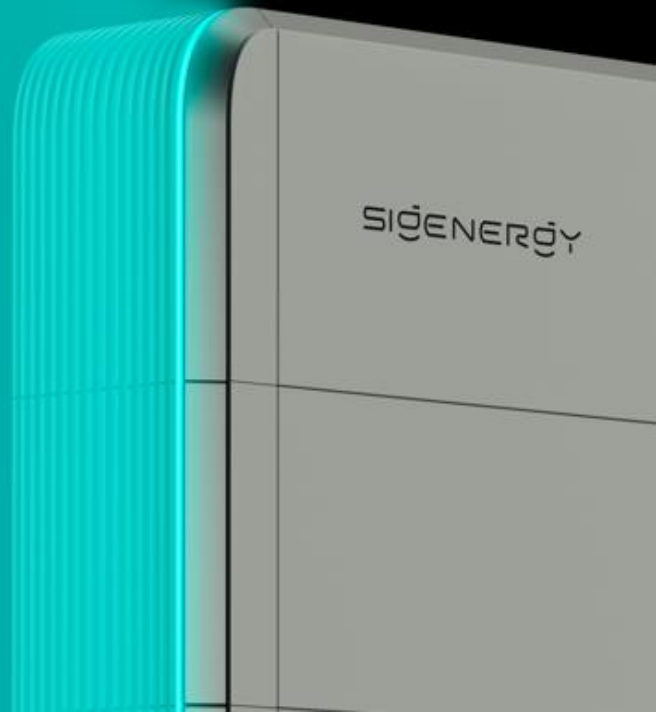

Challenges with ESS

Complex Installation

1 Time-consuming installation, piecing together separate devices bring additional field wiring

2 Complex manual settings, slow system commissioning and software upgrade

3 Extensive wiring & connections, increase the chance of installation error and failure rate

The number of full-time solar installers

0.46 million in 2021 → 1+ million needed in 2030

Challenges with ESS

Safety Issues

1. High voltage at battery pack level leads to arcing, human safety risk
2. Lack of thermal and electrical monitoring in critical spots at cell level to predict potential failures
3. Lack of Pack-level control / targeted electrical isolation
4. Lack of fire suppression and thermal isolation to manage thermal runaway

Battery Fire
Salt River Project in Chandler, Arizona, US

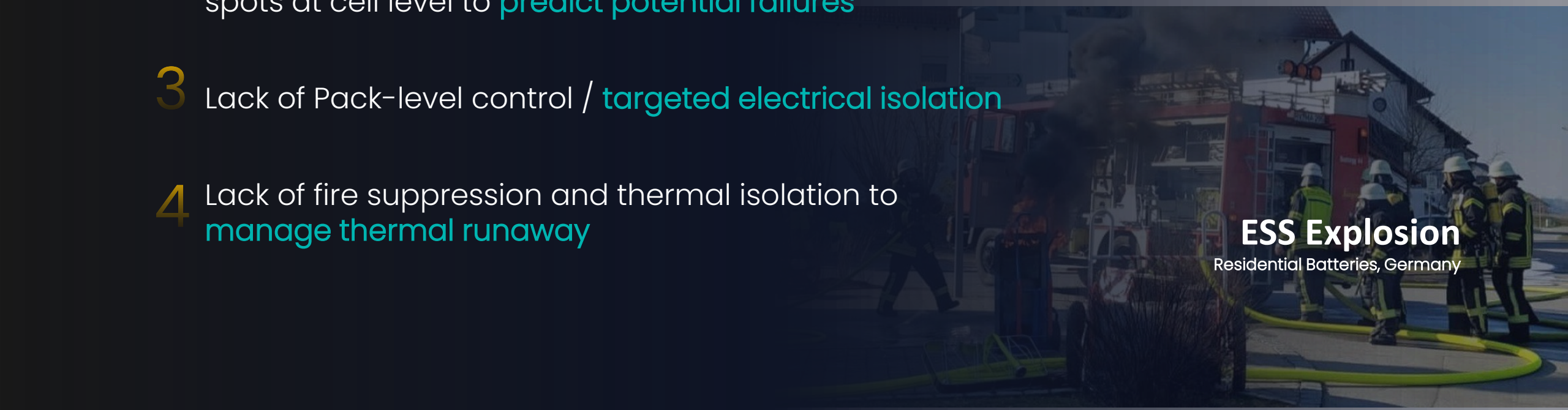

ESS Explosion
Residential Batteries, Germany

Challenges with ESS

Poor Long-Term Performance

1. Mismatch losses grow to significant levels over time and reduce battery capacity and useful life
2. Low system availability, any failure will shut down the entire system. Recovery is time and labor-intensive
3. Field replacement of partial battery never easy, resulting in high cost for each replacement

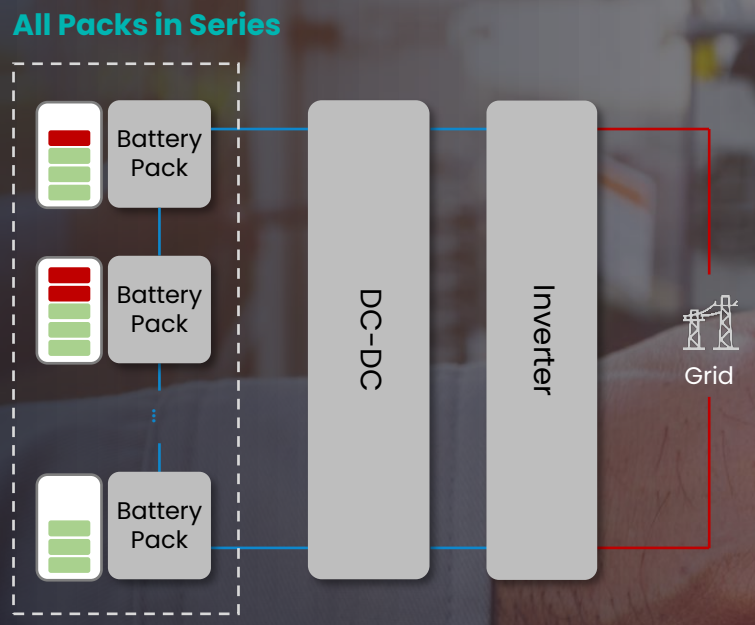

Weakest battery cell dictates performance of the entire pack

SIGENERGY

Pioneering ESS Innovation

Full Integration

Unmatched Safety

Exceptional Performance

Ultra-Fast Installation

Next-level Intelligence

SIGENERGY
SigenStor
The world's first 5-in-1 energy system
Red Dot Design Award
IF Design Award
International Design Excellence Awards

PV inverter
PCS
Battery pack
EMS
DC Charger
SIGENERGY
Fits All Scenarios
AC-Coupled
DC-Coupled
Residential
Commercial
On-Grid
Off-Grid
0ms Switchover
IP66
Whole Home Backup

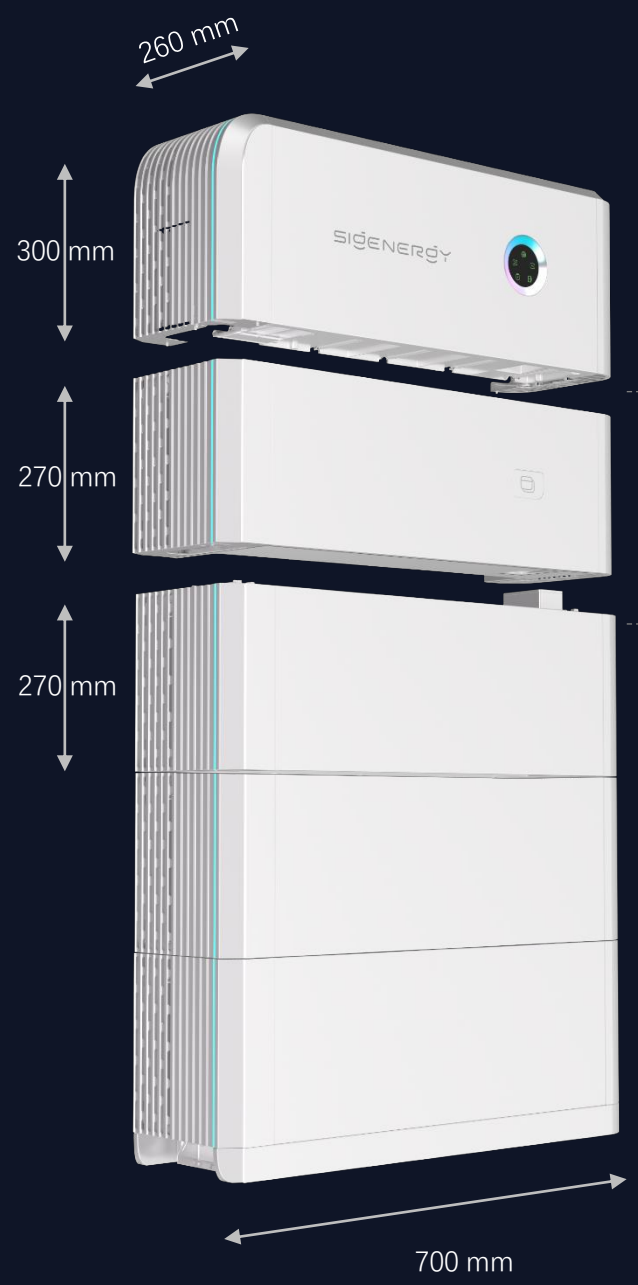

Sigen Energy Controller

Hybrid Inverter

Sigen EV DC Charging Module

Ready for V2X

Sigen Battery

1 – 6 batteries per stack

5 – 48 kWh

energy capacity range per stack

AC output power (kW)

Single phase	5.0	6.0	8.0	10.0	12.0	
Three phase	5.0	10.0	15.0	20.0	25.0	29.9

Bi-directional charging (kW)

12.5 | 25.0

Battery capacity (kWh)

5.0 | 8.0

200x Oversizing

DC/AC ratio

Simple & Fast Installation

1 Quick connectors

70%+ Time Saved

2 Auto-networking

Fast commissioning

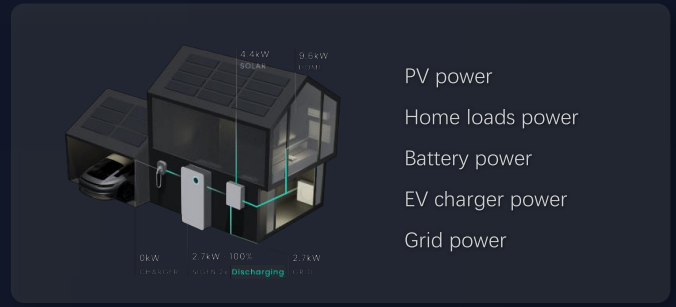

3 One-click diagnosis

Eliminates user error

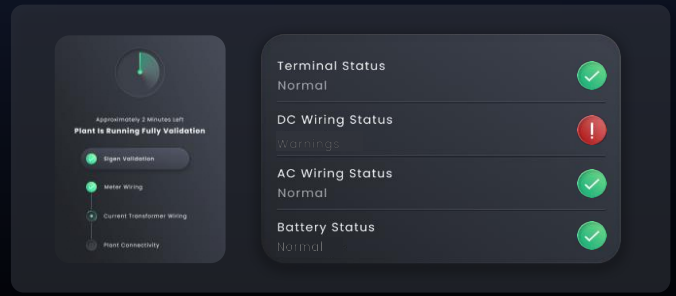

15 mins Stackable Installation

Sigenergy

Others

5 mins Fast Commissioning

Sigenergy

Others

Architecture of Safety

Low voltage = Safety

- Reduces hazardous level during installation, failure and replacement
- Reduces electrical arcing within pack

- Longer cycle life
- Higher energy density

280 Ah
Battery Cells

32.85 V
Static battery voltage human safe

5-layer Battery Protection

1 **Cell-level temp. monitoring**
7 active temp. sensors

2 **Aerogels insulated pads**
In between cells

3 **Decompression valve**
Pressure release

4 **High-temp. resistance insulated pads**
Inner pack wall

5 **Internal fire extinguisher**
Last defense

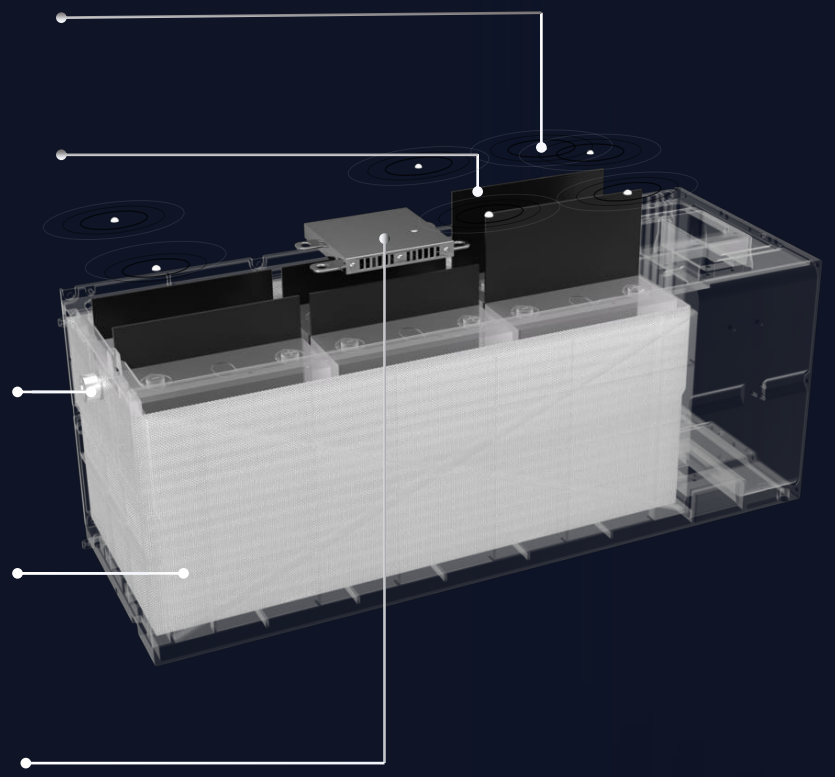

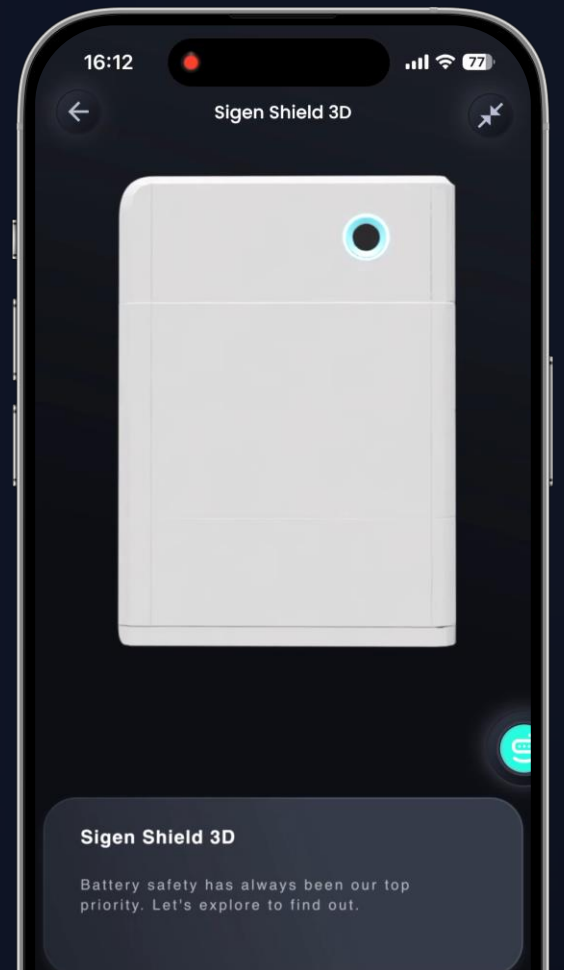

Real-time monitoring of **battery status** on **mySigen App**

5-layer System Protection

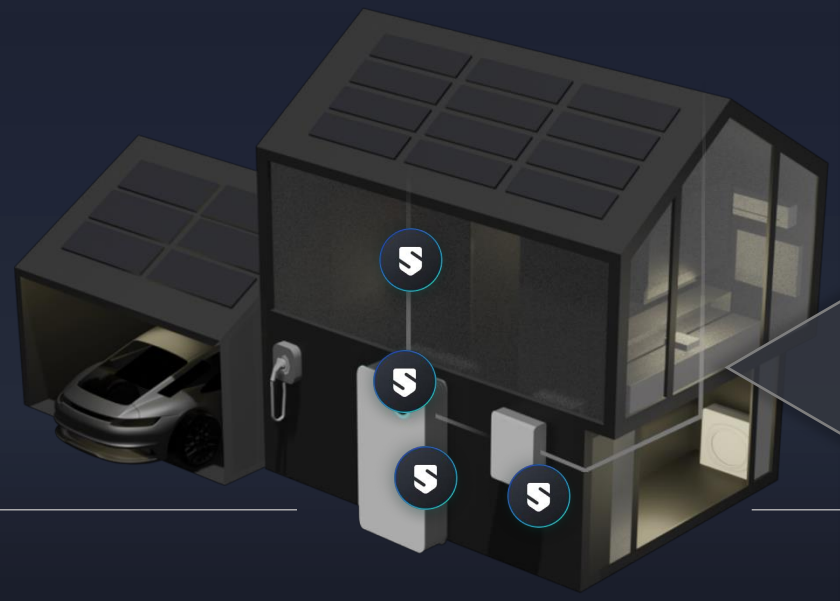

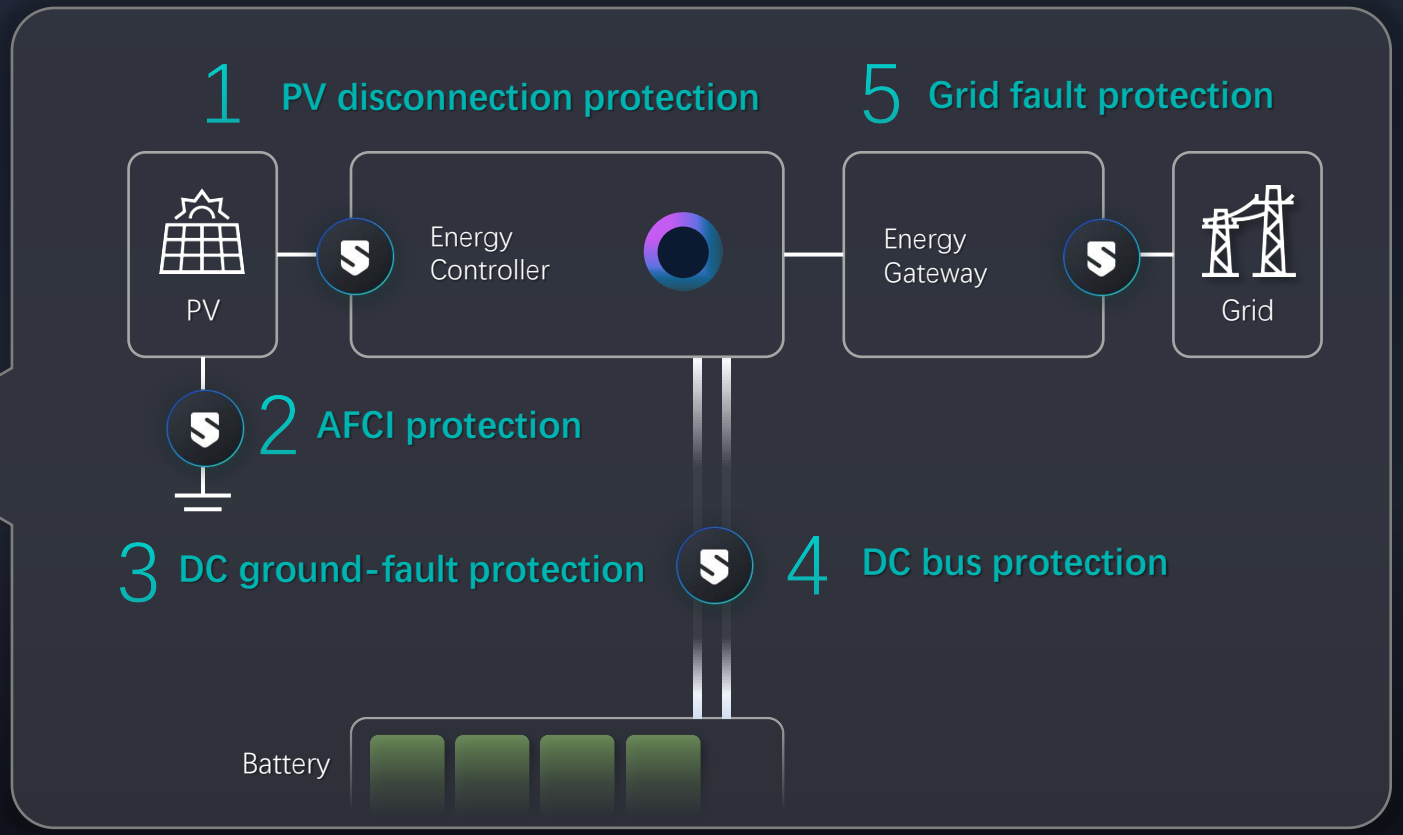

Parallel Connection, Simplify Warehouse Mgmt.

SIGENERGY

Battery Packs Connection in Parallel

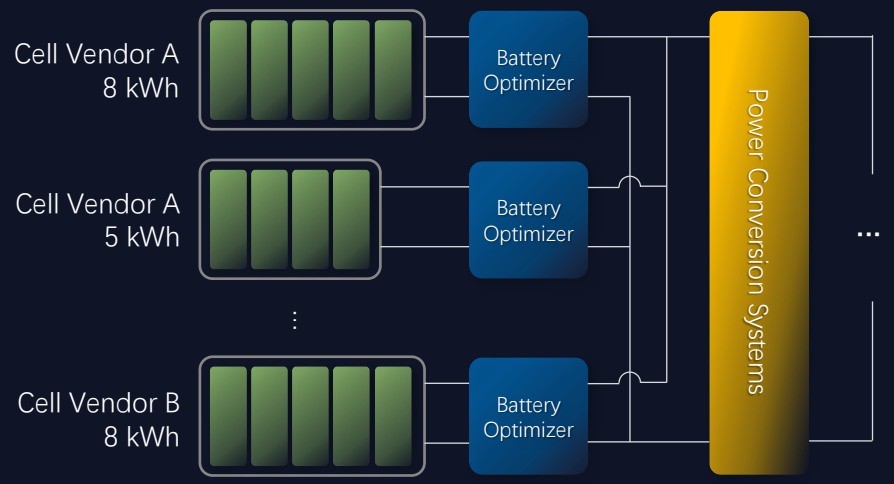

VS

Others

Battery Packs Connection in Series

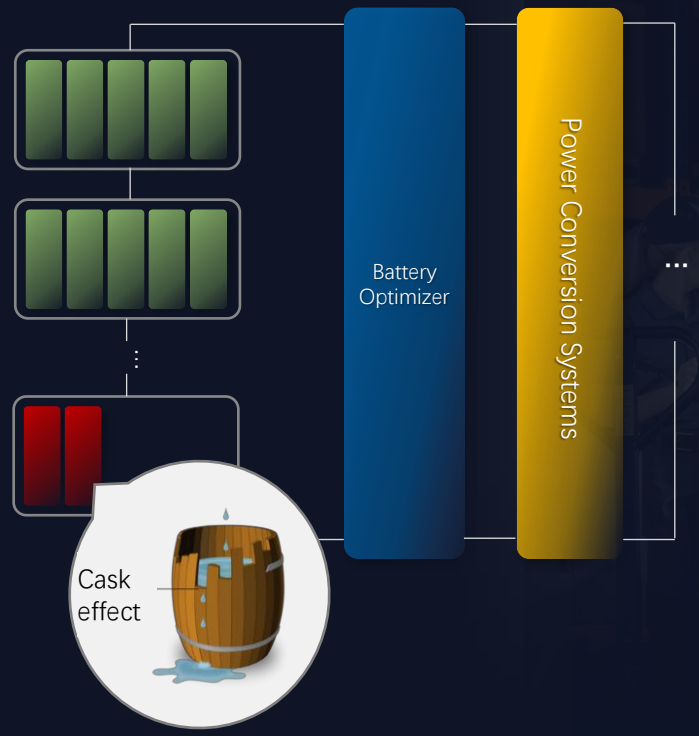

Better battery equalization

Flexible mix of packs for different battery SOH or SOC

Pack-level controllers reduce mismatch losses, isolate failed pack and enable low-cost easy replacement

Multiple energy sources for EVDC Charger

SIGENERGY

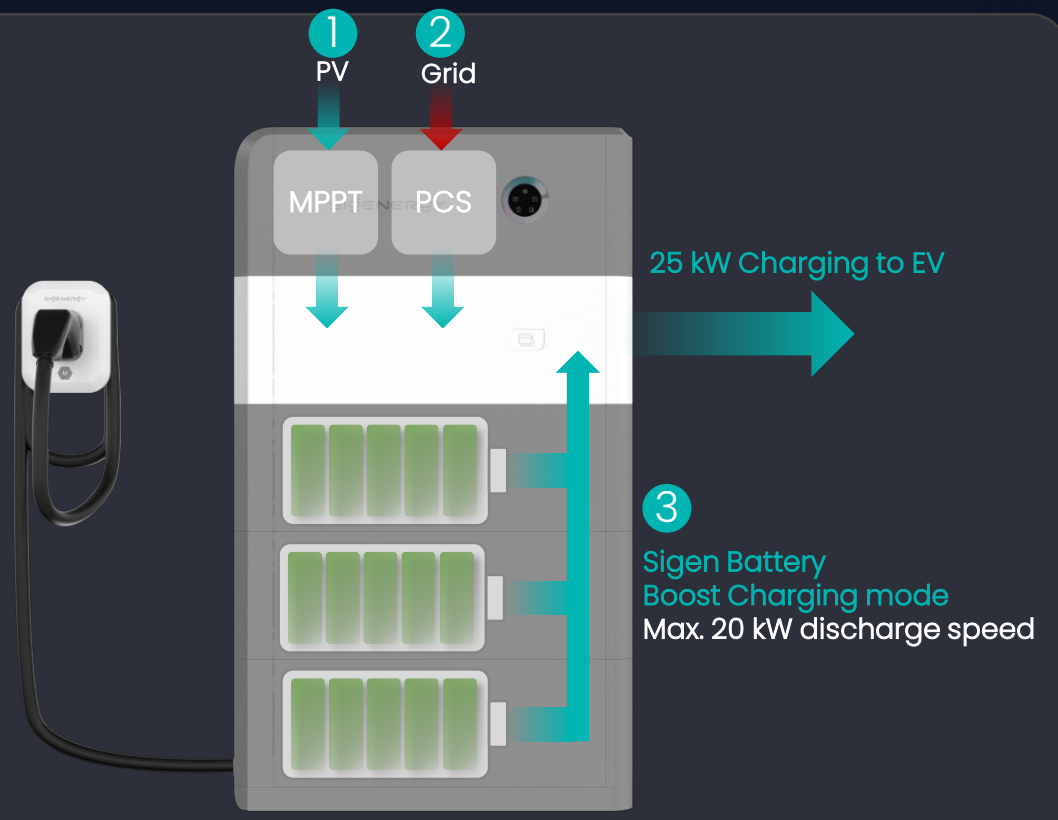

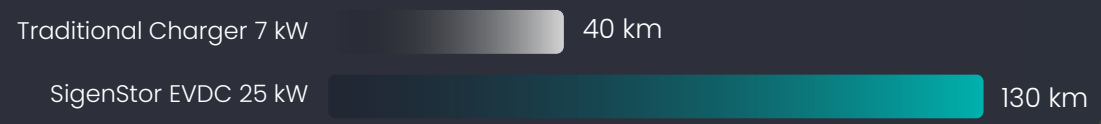

V2X

Bi-directional charging

V2H: backup your home with your EV

V2G: peak shaving and VPP dispatch

Smart control via mySigen App

- Real-time charging status & remote control
- Multiple charging modes

The EV-Home Energy Bridge

Versatile Energy Hub

1 ph Gateway - up to 2 Systems
3 ph Gateway - up to 2 Systems

Uninterrupted 3 sources of hybrid power

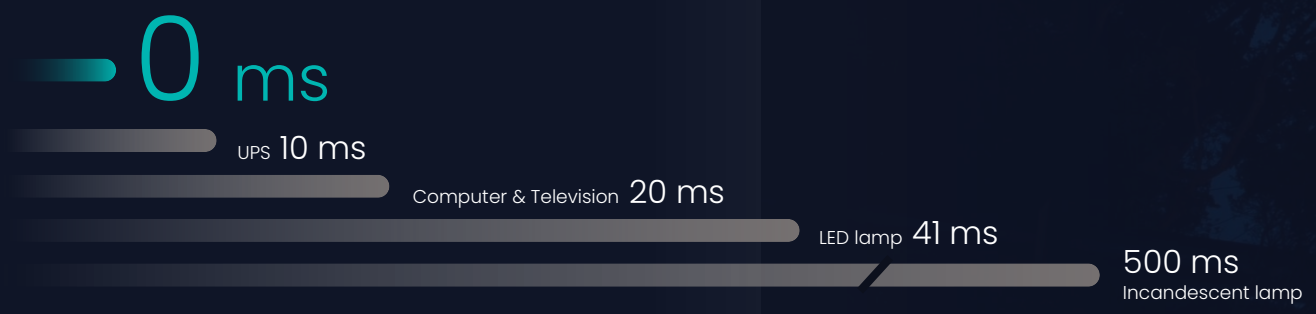

Both whole home & partial backup supported

Hybrid System – Whole Home Backup

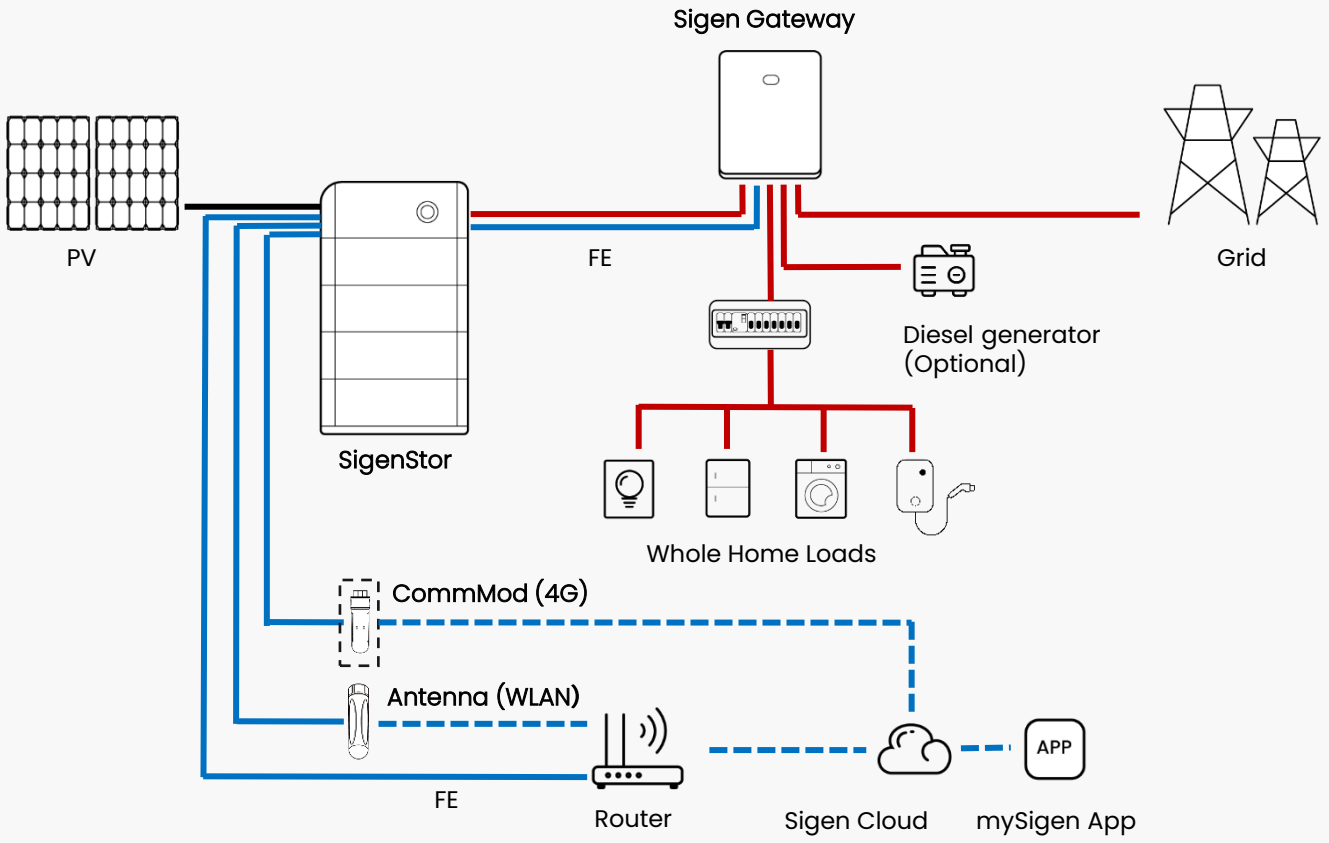

Whole Home Backup solution is mainly to support uninterrupted power to all the home loads if a grid failure happens.

Characteristics

1. Multiple SigenStor can connect to one Sigen Gateway.
2. Support mix use of 5/8kWh, old/new batteries.
3. 0 ms on-off grid switching.
4. Both AC&DC EV Charging supported.
5. Diesel generator supported.
6. Three choices of communication modes.
7. Self-generation & consumption supported.

	Sigen Configuration	Quantity
SigenStor	Sigen Energy Controller SigenStor EC XX	1
	Sigen Battery SigenStor BAT XX	1 ~ 6 per stack
	Sigen Energy Gateway	1
	Sigen CommMod	1

Hybrid System – Partial Home Backup

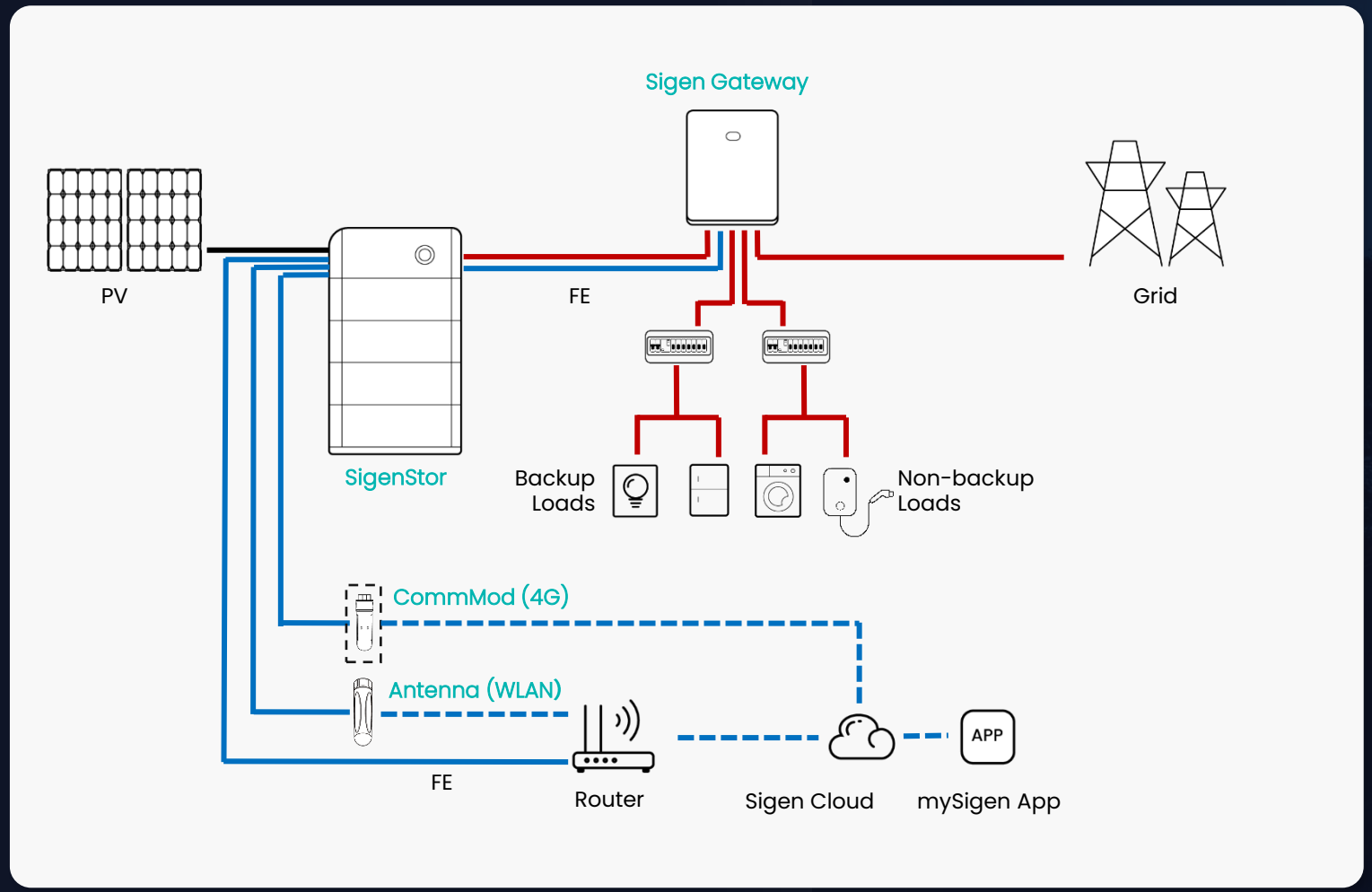

Partial Home Backup solution is mainly to cut off secondary loads and support uninterrupted power to critical home loads if a grid failure happens.

Characteristics

1. Multiple SigenStor can connected to one Sigen Gateway.
2. Support mix use of 5/8kWh, old/new batteries.
3. 0ms on-off grid switching.
4. Both AC&DC EV Charging supported.
5. Three choices of communication modes.
6. Self-generation & consumption supported.

	Sigen Configuration	Quantity
SigenStor	Sigen Energy Controller SigenStor EC XX	1
	Sigen Battery SigenStor BAT XX	1 ~ 6 per stack
	Sigen Energy Gateway	1
	Sigen CommMod	1

Off-Grid Only System

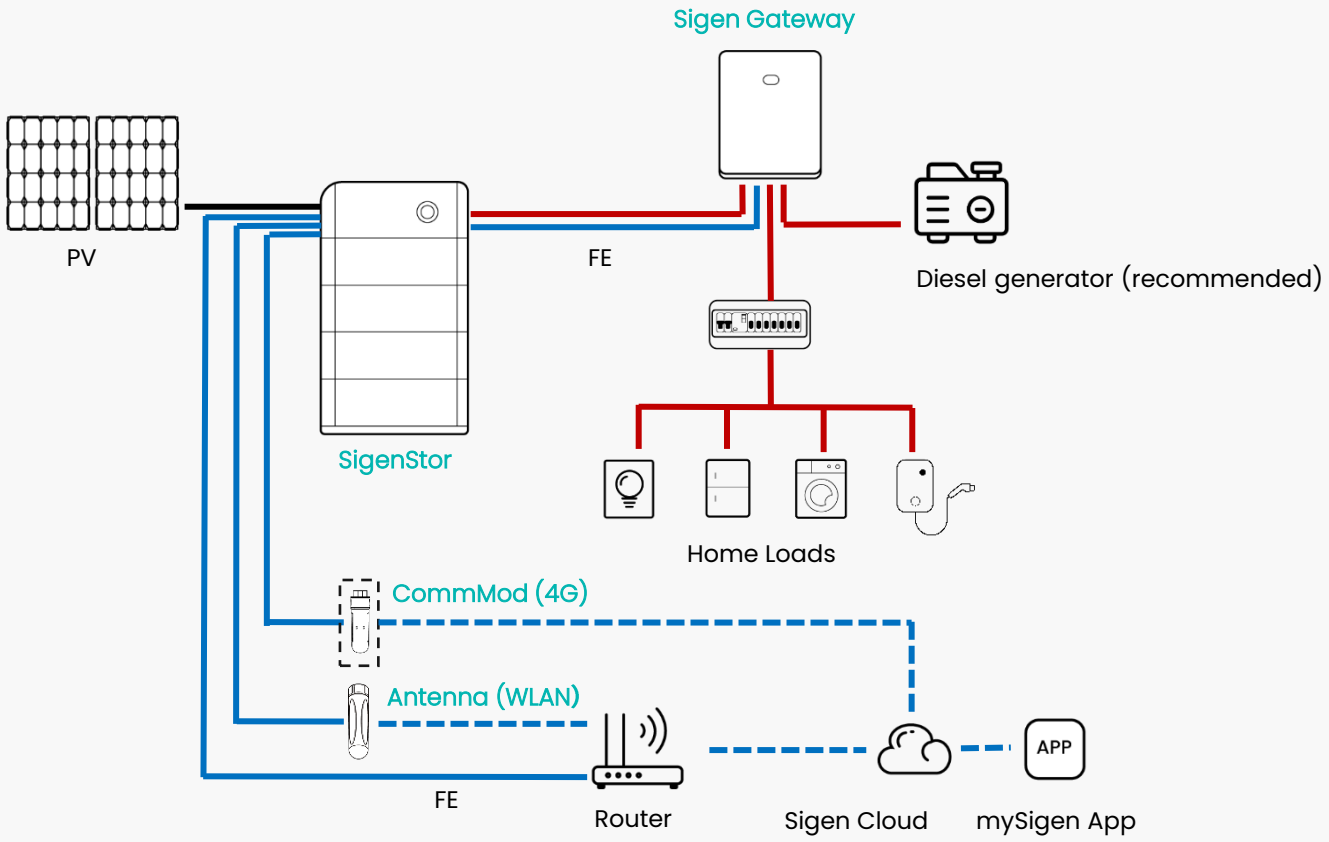

Off-grid solution is mainly used to support the scenario where there is no grid power supply.

Characteristics

1. Black start supported.
2. Up to 3 SigenStor can connected to one Sigen Gateway.
3. Diesel generator supported.
4. Support 5/8kWh & old/new battery mixed use.
5. Self-generation & consumption supported.

	Sigen Configuration	Quantity
SigenStor	Sigen Energy Controller SigenStor EC XX	1
	Sigen Battery SigenStor BAT XX	1 ~ 6 per stack
	Sigen Energy Gateway	1
	Sigen CommMod	1

Retrofit System (AC of DC Couple)

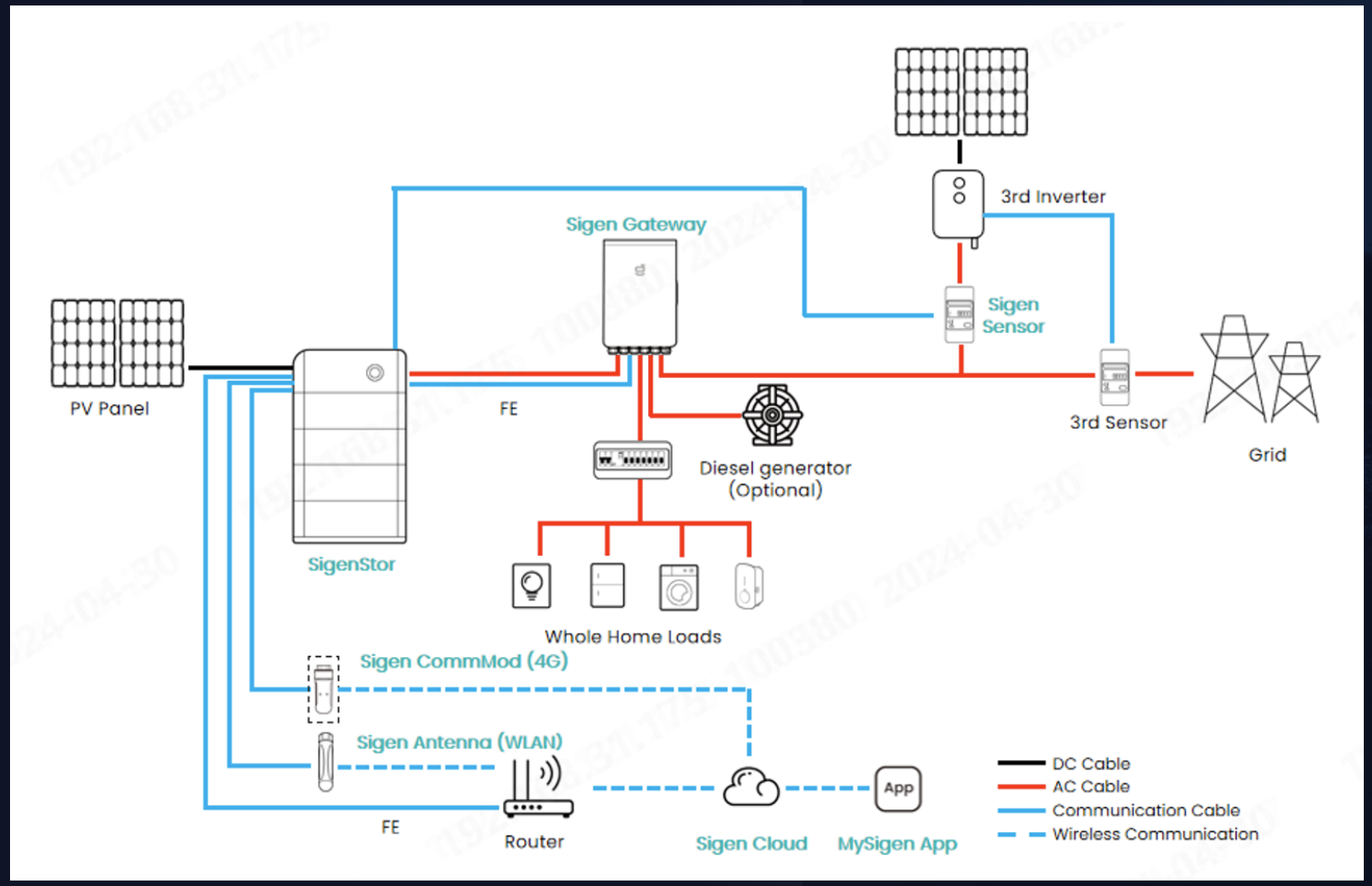

Retrofit solution allows an existing on-grid system to be connected to SigenStor for maximum self-consumption, centralized monitoring with zero-export capabilities.

Characteristics

1. Black start supported.
2. Up to 3 SigenStor can connected to one Sigen Gateway.
3. Diesel generator supported.
4. Support 5/8kWh & old/new battery mixed use.
5. Self-generation & consumption supported.

	Sigen Configuration	Quantity
SigenStor	Sigen Energy Controller SigenStor EC XX	1
	Sigen Battery SigenStor BAT XX	1 ~ 6 per stack
	Sigen Energy Gateway	1
	Sigen CommMod	1

On-Grid Only System – PV + Energy Storage

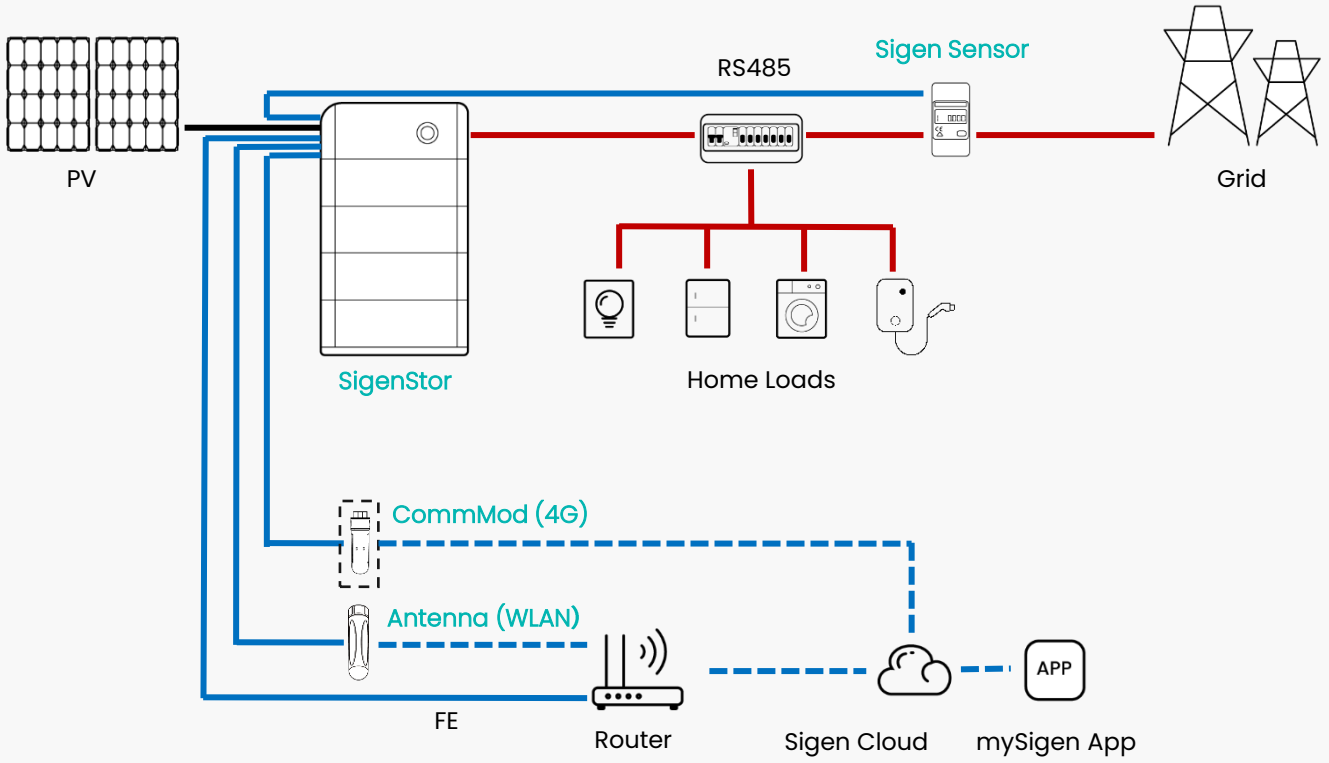

PV + energy storage solution is mainly used to support the scenario where the grid power supply is stable and no backup power needs.

Characteristics

1. Up to 10 SigenStor in parallel connection.
2. Support mix use of 5/8kWh, old/new batteries.
3. Both AC&DC EV Charging supported.
4. Three choices of communication modes.
5. Self-generation & consumption supported.

	Sigen Configuration	Quantity
SigenStor	Sigen Energy Controller SigenStor EC XX	1
	Sigen Battery SigenStor BAT XX	1 ~ 6 per stack
	Sigen Sensor	1
	Sigen CommMod	1

On-Grid Only System – PV + Future ESS Expansion

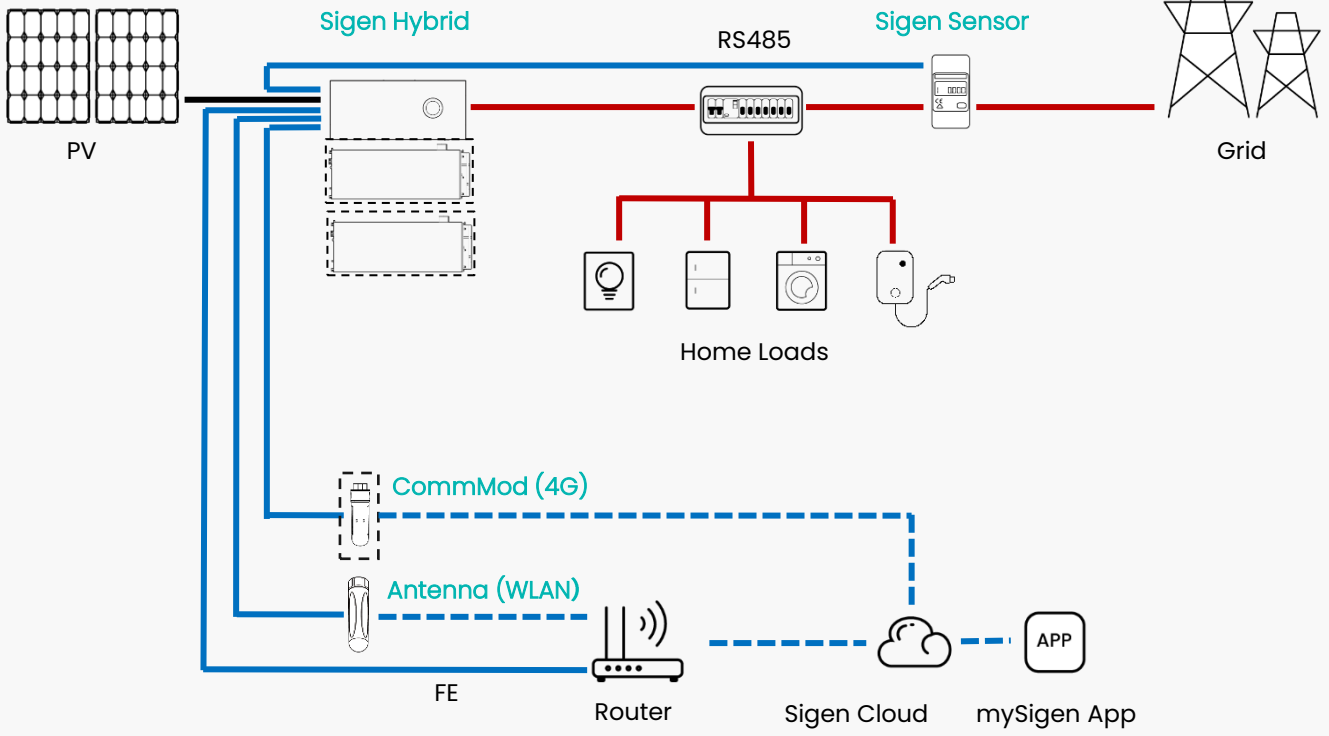

Hybrid PV Only solution is mainly used to support the scenario where there is only PV module installed with future ESS expansion intention.

Characteristics

1. Future battery expansion supported.
2. Three choices of communication modes.
3. Self-generation & consumption supported.

Sigen Configuration	Quantity
Sigen Hybrid Inverter	1
Sigen Sensor	1
Sigen CommMod	1

100% output power in off-grid

100% off-grid power, industry-leading performance in off-grid

3-Phase 4-Wire design

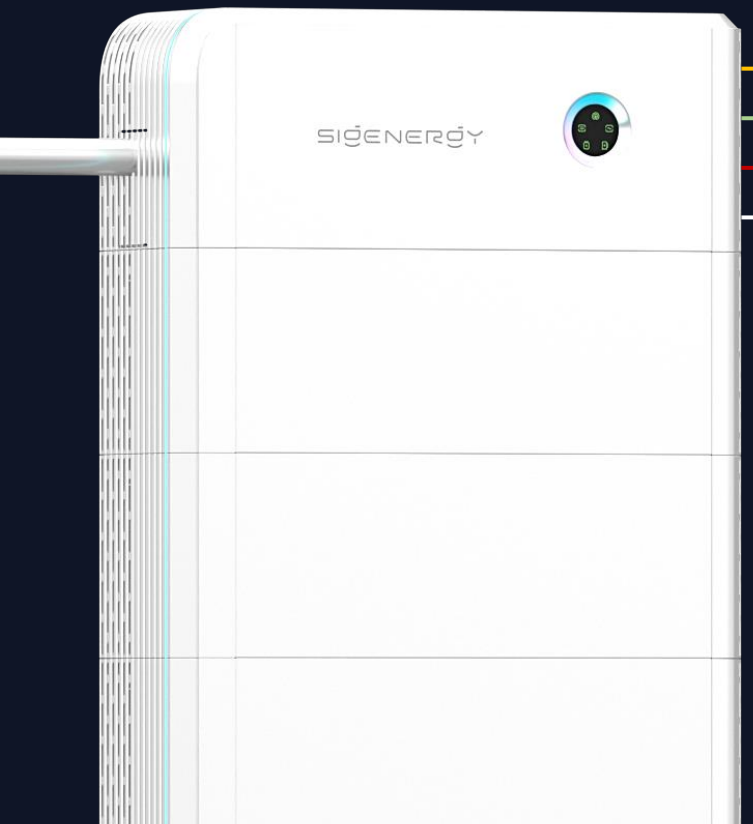

Sigenergy off-grid output ratio:

100%

Other solutions (3-phase 3-wire) in off-grid system

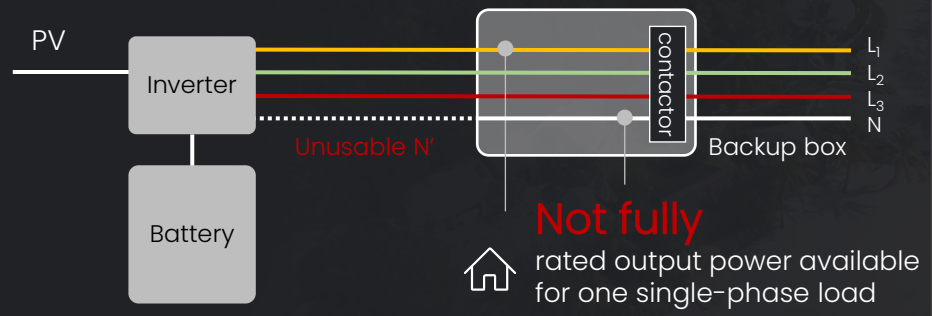

	Nominal output power (on-grid)	Output power (Off-grid)	Output power/ nominal power ratio
Sigenergy	10.0 kW	10.0 kW	100%
H vendor	10.0 kW	3.3 kW	33%

Powerful EV AC Charger

Sigen EV AC Charger

7 kW / 11 kW / 22 kW

One platform for all

- PEN disconnection protection
- Split-phase, NEMA Pluggable wiring
- Emergency stop switch
- Case B with Shutter

Innovative charging mode

Green power charging

To save energy cost

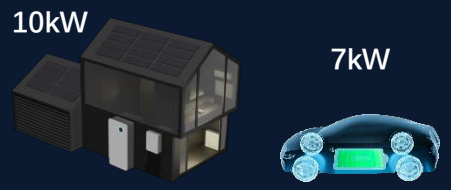

Dynamic charging

To prevent overload, user-friendly charging

Highly integrated for easy installation

1 Bracket fixing

Top/Bottom Entry

Meet different installation scenarios

2 Wiring

"Click-in"

3 Align the rear cover

√ Finish

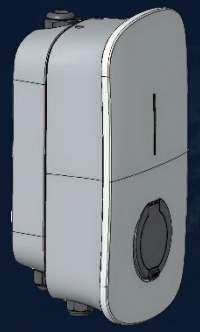

15 mins

Installation time

mySigen App

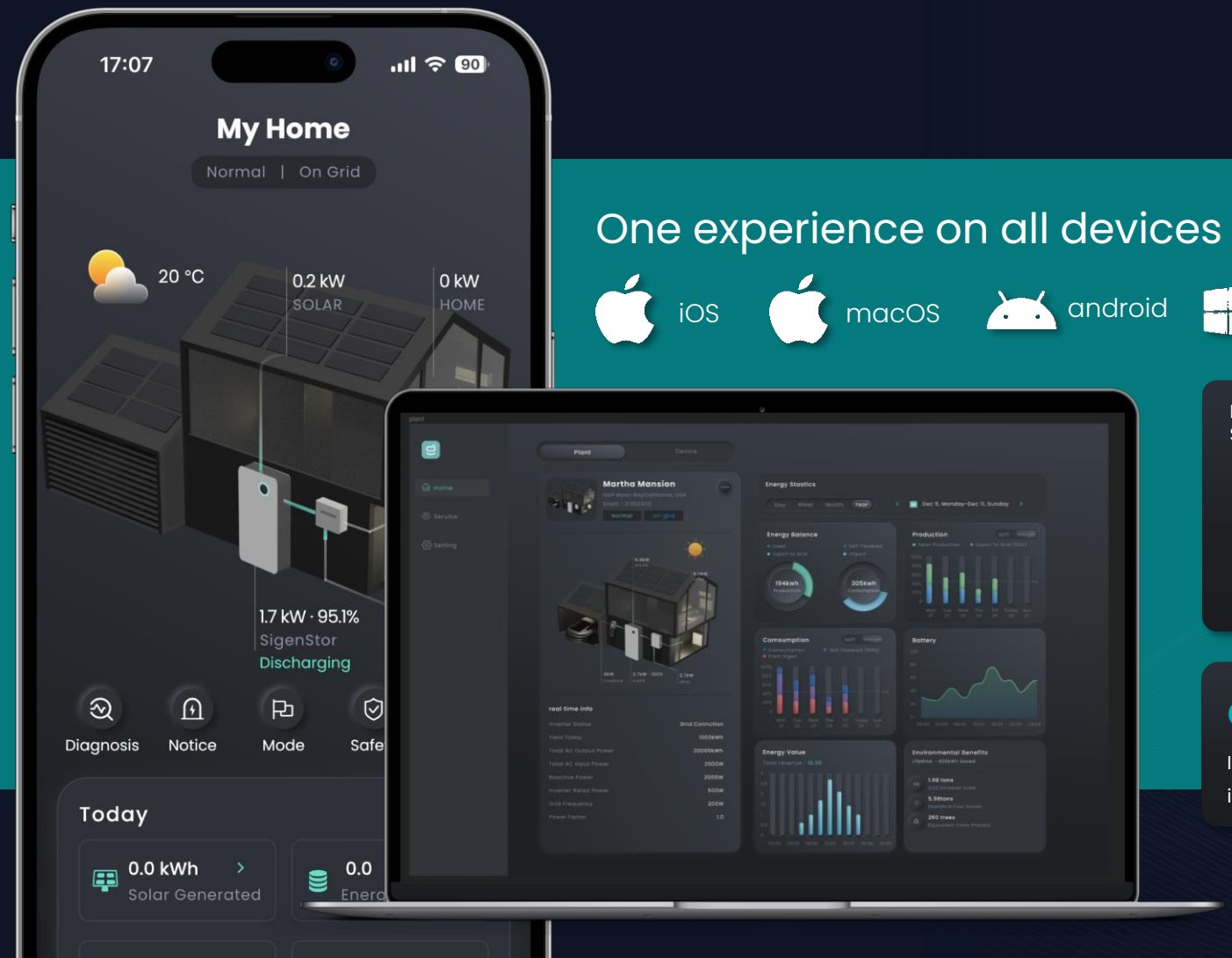

One experience on all devices

iOS macOS android Windows

Real-time Monitoring of System Status

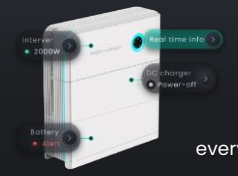

Data refresh every 10 seconds

One click-diagnosis for System health Check

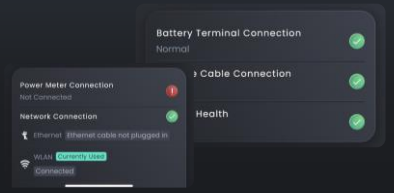

GPT-4

Integrated in Service

Light language Setting

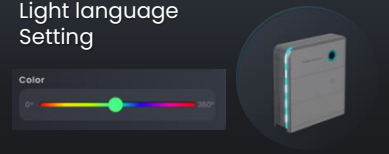

VPP Capable

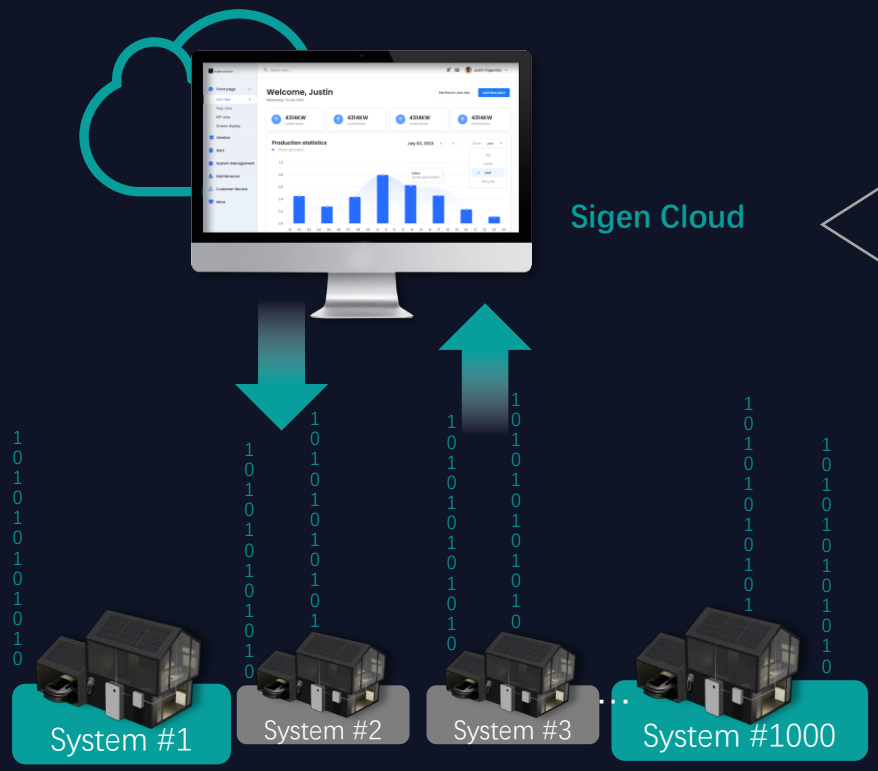

Flexible Open API. Ready for VPP integration

1. Instructions

Indicator signal	Control signal	Attribute signal
• Real (Active) power • Reactive power • Frequency	• Low/High voltage ride through • Storage operation Mode • TOU settings	• Rated voltage • Rated frequency • Maximum absorbed power

* More instructions not listed

2. Send instructions **in groups**

3. **Subscription** for auto data push

SigenStor

The world's first
5-in-One

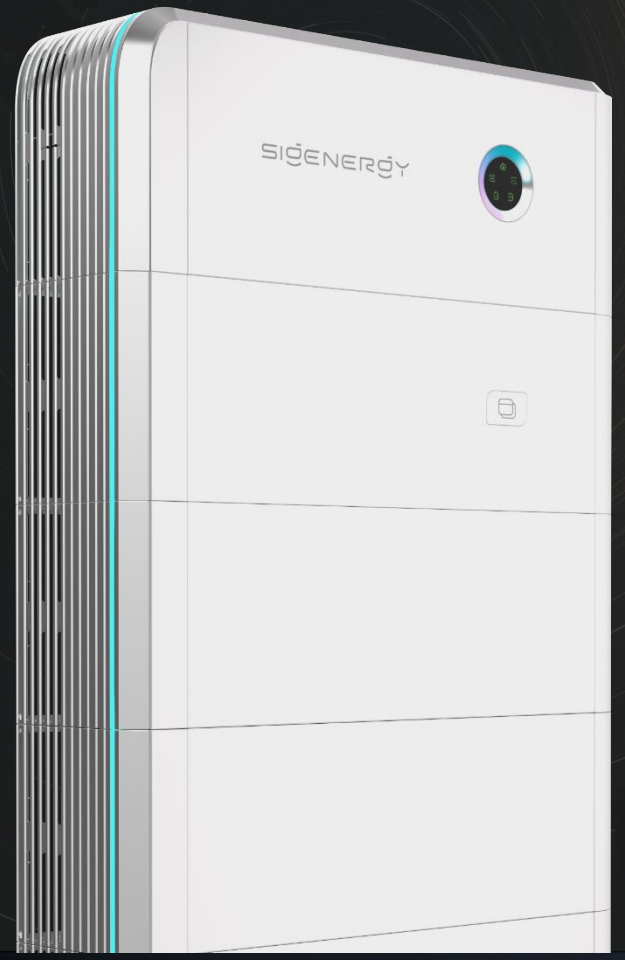

DC Charging

Integrated into solar + ESS system for the first time

Sigen AI

The world's first GPT-4 empowered energy APP

0 ms

Load side disruption

V2X

Bi-directional charging

5-layer

Battery safety protection

280 Ah

Long cycle-life battery cell

15 mins

Stackable installation

5 mins

Fast commissioning

Off-grid ESS system for a private resort, Australia

Panton Hill, Australia

AC Output Power
70 kW

ESS capacity
336 kWh

Annual diesel reduction
17,922 Litre

Diesel cost savings
32,797 AUD/year

Virtual power expansion
Cutting diesel usage first and phasing out diesel power with solar power

Thank You.

inter solar connecting solar business | EUROPE

RE+

SMART ENERGY COUNCIL

ALL-ENERGY AUSTRALIA EXHIBITION & CONFERENCE